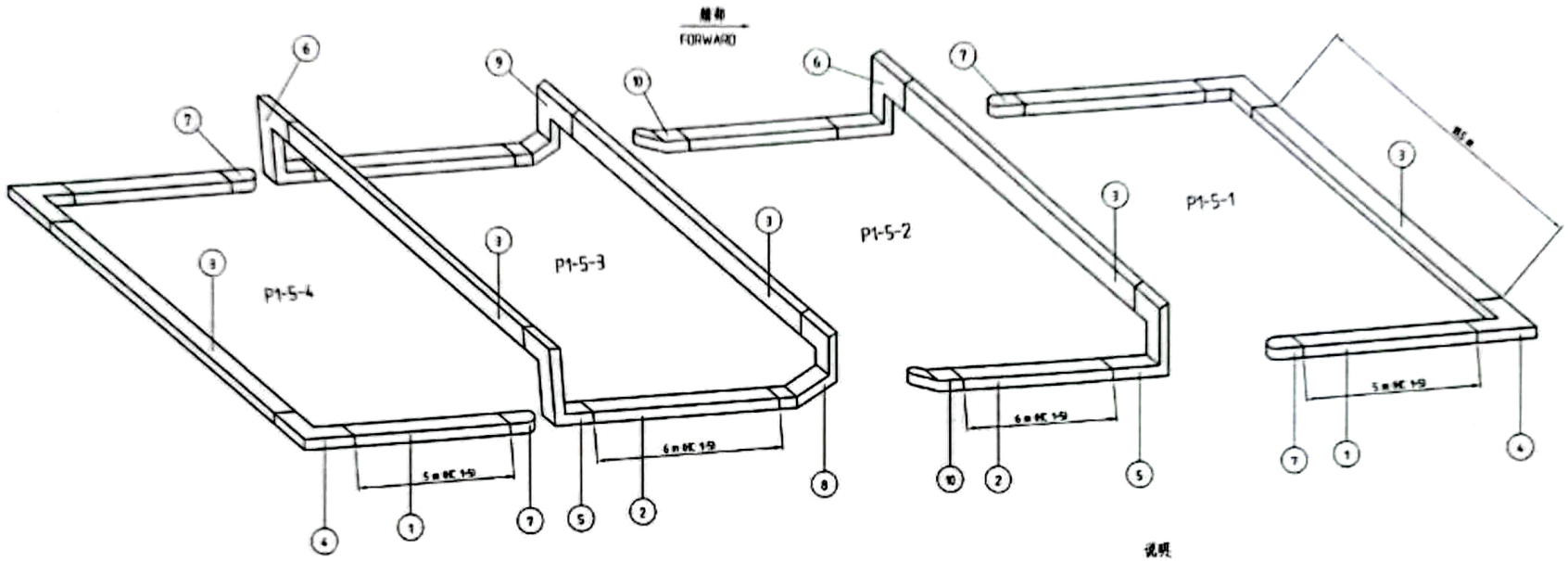

说明

1. 表列数量为 1 舱用量，全船共 5 舱.

2. 橡皮安装步骤见"盖条橡皮安装说明"

NOTE:

1. No. OFF IN LIST IS ONLY FOR 1 HATCH, THERE ARE 5 SETS TOTALLY OF THE SHIP.

2. PROCEDURE OF SEAL INSTALLATION IS SHOWN ON "INSTRUCTION OF SEAL INSTALLATION

序号 ITEM NO.	代号 DRAWING NO.	名称 DENOMINATION	数量 NO. OFF	材料 MATERIAL	单重 UNIT WEIGHT kg	总重 TOTAL WEIGHT kg	备注 REMARKS	供货单位 DELIVERER
10	HRC54.2030	30° 端头橡皮 30° FLAT END JOINT SEAL	2	EPDM	1.2	2.4		TTS
9	HRC54.1230	四向转角橡皮(94x55 右式) 4 WAY CORNER PIECE (94x55 RIGHT)	1	EPDM	2.7	2.7		TTS
8	HRC54.1130	四向转角橡皮(94x55 左式) 4 WAY CORNER PIECE (94x55 LEFT)	1	EPDM	2.7	2.7		TTS
7	HRC52.2001	平端接头橡皮 94x55 END PIECE SEAL	4	EPDM	1.6	6.4		TTS
6	348-1052	三向直角转角橡皮(94x55 右式) 3-WAY VERTICAL CORNER (94x55 RIGHT)	2	EPDM	3.7	7.4		TTS
5	348-1051	三向直角转角橡皮(94x55 左式) 3-WAY VERTICAL CORNER (94x55 LEFT)	2	EPDM	3.7	7.4		TTS
4	HRC51.0001	90°平直角橡皮 94x55 FLAT CORNER SEAL	4	EPDM	2.2	4.4		TTS
3	HRC50.0000	平直橡皮 94x55 STRAIGHT SEAL	5	EPDM	90.65	453.25	185m	TTS
2	HRC50.0000	平直橡皮 94x55 STRAIGHT SEAL	4	EPDM	29.4	117.6	6m	TTS
1	HRC50.0000	平直橡皮 94x55 STRAIGHT SEAL	4	EPDM	24.5	98	5m	TTS

橡皮标准剖面
TYPICAL SECTION

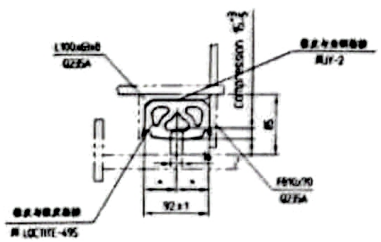

中间铰链接缝剖面
BOTTOM HINGE JOINT SECTION

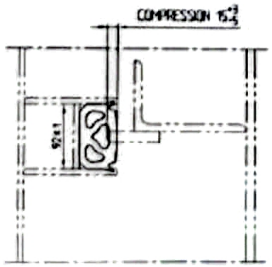

分离接缝剖面
MAIN JOINT SECTION

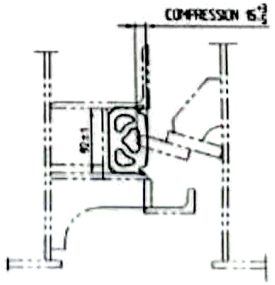

NO: AN - TK0101/02/03/04/05/06/07/08/09/10

57000 DWT BULK CARRIER - TRANSFOLDING

150 | 5456-251 | 150 2553 | 401629

742

NO.1-5舱舱盖橡皮布置图

SEALING PLAN OF HC 1-5

TTS HuaHai

2007.11 TB
2007.11 WZH
2007.11 ZHJ

A2 | 150 | 1 | F

348-1050

THE DRAWING AND THE DESIGN IS THE PROPERTY OF TTS HuaHai Ships Equipment Co.Ltd
NOT MAY BE DISCLOSED TO ANY THIRD PERSON WITHOUT OUR WRITTEN PERMISSION

CamScanner
Scanned with CamScanner